MetalCloak
Installation Instructions

PRODUCT: **TJ/LJ Rear Bumper & Tire Carrier**

REV: E | 02-27-2018 | II-2841

READ INSTRUCTIONS IN FULL BEFORE INSTALLATION.

QUESTIONS? CALL 916-631-8071 M-F 7:00 AM – 5:00 PM PST

The MetalCloak experience includes the ease of installation of our products. We design for most contingencies, but installation may be different based on different Jeep condition, configuration and/or year.

We are continually trying to improve our products and instructions – please help us by providing feedback and pictures if you find any part of the instructions that do not match your particular Jeep or are not easily understandable.

If you have any difficulties at all, please give us a call. Thank you and enjoy your MetalCloak Products!

IMPORTANT NOTE: We use Stainless Steel Hardware where possible. Therefore, a tube of Silver Anti-seize is provided and should be used on all bolts—only a small amount is needed.

WARRANTY INFORMATION: This article is sold without warranty expressed or implied. No warranty or representation is made as to this products ability to protect the user from injury or death. The user assumes that risk. The effectiveness, warranty and longevity of this equipment are directly related to the manner in which it is INSTALLED, USED and/or MAINTAINED. THE USER ASSUMES ALL RISK. By purchasing this product and opening the packaging, purchasers expressly acknowledge, understand and agree that they take, select and purchase these MetalCloak products from Armored Works, LLC, its affiliates and distributors and agents as is and with all faults. The entire risk as to the quality and performance of these MetalCloak products is with the purchaser. Working on your vehicle can be a dangerous activity. If you are unsure of what you are doing, please leave mechanical or safety critical work to a skilled mechanic. We take no responsibility for the incorrect use and/or installation of MetalCloak products.

Section 1: Tools & Notes on Installation

Tools Required: This list is the recommended tools for ease of installation. Other versions of the same tool can be used. For example, Allen Wrenches instead of Allen Drive Sockets.

Socket & Ratchet Wrench

16MM Socket/Wrench
21MM Socket/Wrench
13 MM Socket/Wrench (Tire Carrier)

5/16” Allen Drive Socket or Wrench

1/2” Socket/Wrench
11/16” Socket/Wrench
3/4” Socket/Wrench

T50 ‘Torx’ Key Socket/Wrench

Bearing Grease

Phillips Screwdriver

HOW TO USE THIS GUIDE: The installation guide contains ALL steps for installation. Please read and follow the instructions in order of each page top to bottom, and left to right.
Jeep Model: Instructions may apply to multiple Jeep models, but are labeled separately where appropriate (i.e. TJ vs. LJ).
Options: Because of the number of component options we offer, these instructions may contain steps that will not match your particular configuration. You can skip these steps.
Images: Pictures are provided and parts are labeled throughout the instructions. Each text box contains guidance based on the pictures next to it. The text will refer to alphabetical labels (A, B, etc.) found in the images.
Installation Notes: Terms may be used in the body of the instructions that you may not be familiar with, if you have any questions feel free to contact us at the number below, or email techhelp@metalcloak.com
QUESTIONS: Any questions or comments about the instructions? Call us at 916-631-8071 M-F 7:00 AM – 5:00 PM PST.

Section 2: Product Components

DC-0001 REV A

SHEET 1 OF 1

ITEM	PART NUMBER/DESCRIPTION	QTY.
1	2802 FRAME BRACE KIT, REAR TJ	1
2	2803 REAR TIRE CARRIER BASE, STEEL TJ	1
3	2830 TIRE CARRIER ARM, TJ	1

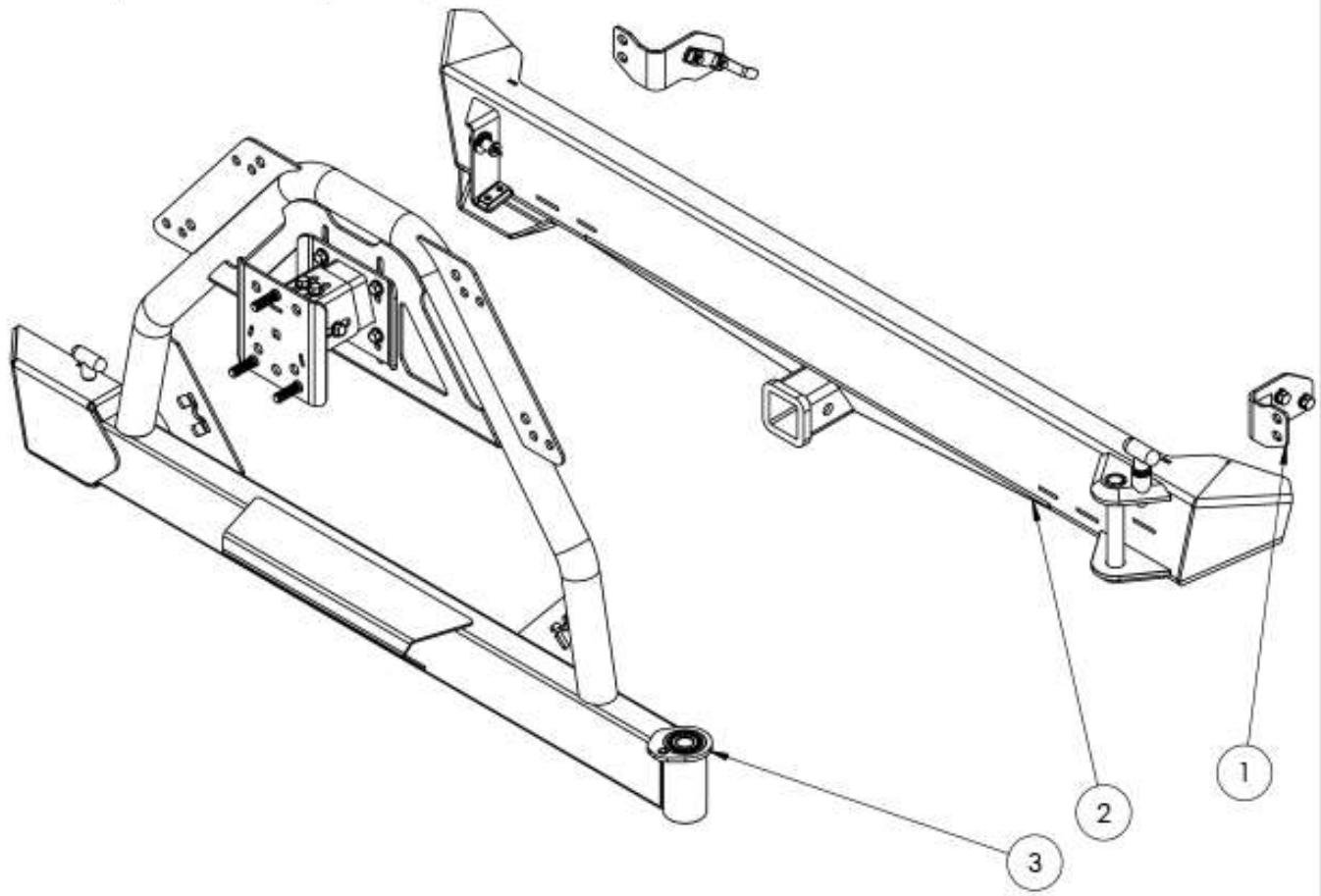

THE INFORMATION CONTAINED ON THIS DRAWING IS THE EXCLUSIVE PROPERTY OF ARMORED WORKS, LLC. UNAUTHORIZED REPRODUCTION IS PROHIBITED.

DO NOT SCALE DRAWING

METAL CLOAK
A DIVISION OF ARMORED WORKS, LLC

PART NUMBER DESCRIPTION 2841 TJ BUMPER BASE 62IN TIRE CARRIER KIT

Section 3: Installation Instructions

Step 1: Remove Stock Bumper

A. Remove the spare from the rear tire mount. Even if you're not installing the MetalCloak Tire Carrier, this will give you some additional room to work.

B. If you are installing the Tire Carrier, remove the stock Spare Tire Mount Bracket.

C. Disconnect the third brake light and stow the wires, or relocate if desired.

D. Remove the stock screws from the outside frame rail. You will not reuse this hardware.

E. Remove the two bottom bolts from under the frame. Save this hardware.

F. Remove the stock steel bumper and set aside.

Step 2: Install MetalCloak Bumper Frame-Built Rear Bumper

G. Mount the MetalCloak Rear Bumper using the two bottom bolts from under the frame.

H. Remove body mount bolt.

I. Put the frame brackets in place and secure it with the provided hardware in the front two holes using the provided flag nut.

Step 2: Install MetalCloak Bumper Frame-Built Rear Bumper

J. Install the provided hardware through the bracket and the frame mount into the Bumper Base. Tighten all frame bracket bolts finger tight.

K. Re-install body mount.

L. Make desired alignment adjustments and fully tighten all hardware at this time

Step 3: Install MetalCloak Tire Carrier Arm

M. Pack the roller bearings with bearing grease

N. Insert roller bearings into race.

Step 3: Install MetalCloak Tire Carrier Arm

O. Lift the Tire Carrier Arm into place and align between the Hinge Plates on the passenger side. Feed the Hinge Shaft through the Hinge Plates and Bearings.

Note: *You may need to remove powdercoat for hinge shaft clearance with file.*

P. Install the provided 1/2” Hex Head Bolts with a 1/2” Washer into both ends of the Hinge Shaft and fully tighten.

Q. Install the T-handle Spring Pin.

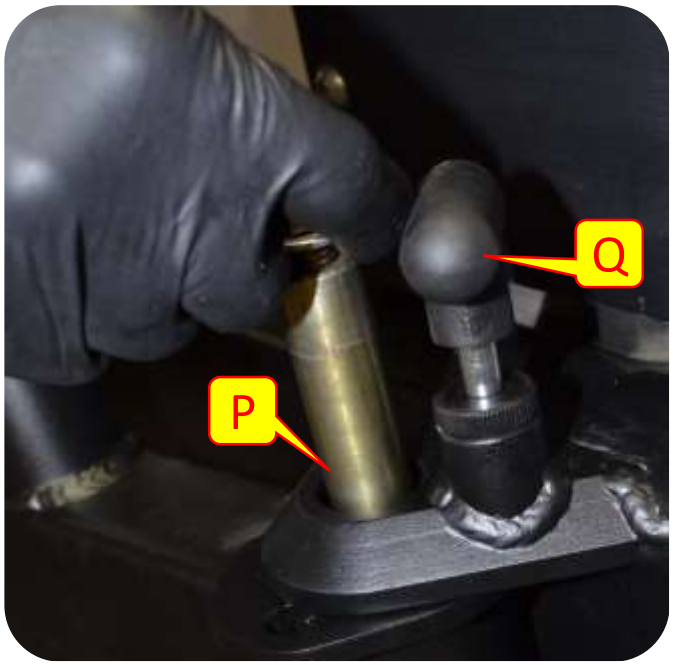

Step 3: Install MetalCloak Tire Carrier Arm

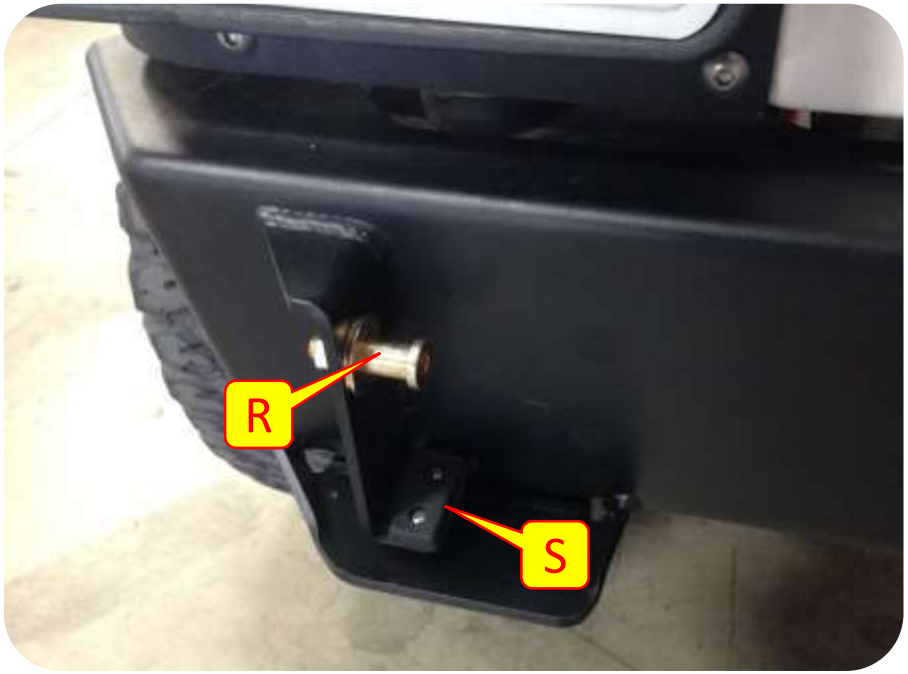

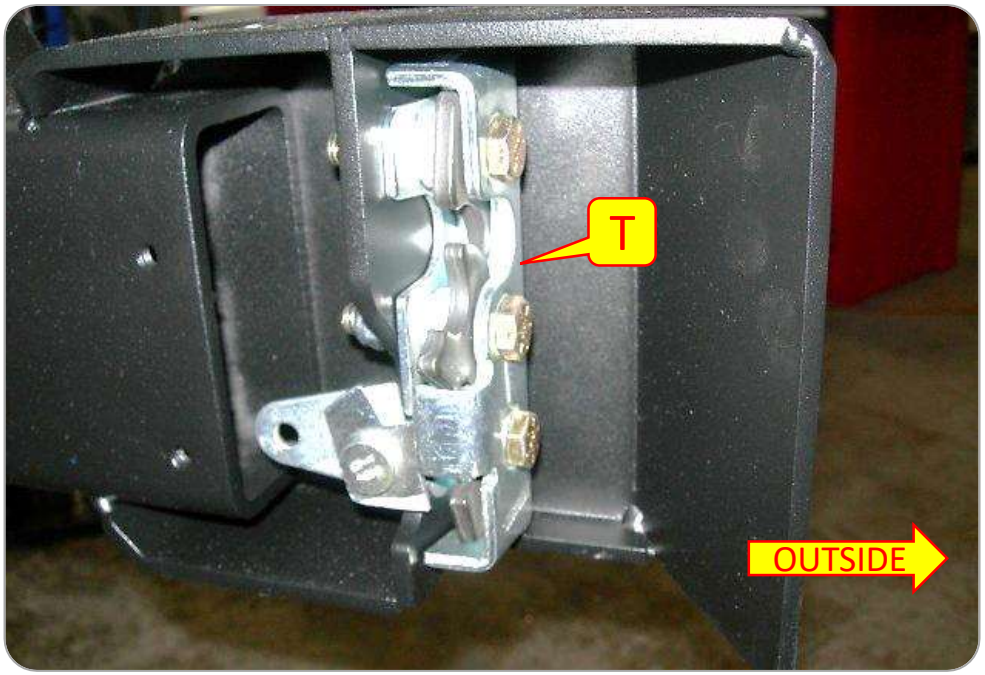

R. Bolt the Latch Striker in place backed by a 7/16” Hex Flange Nut. Note that there is room for some vertical adjustment in this location; start with the Striker at the bottom of the slot and adjust from there as needed.

S. Attach the Dovetail Bumper using #8-32 Self-Tapping Screws. If the holes are tight use a #26 drill to open them for easier installation.

T. Install the Dovetail Latch on the Arm using the 5/16”-18 Bolts, Nylock Nuts and Washers. The Latch goes on the “outside” and the Nuts/Washers go on the “inside” of the Latch Housing.

Step 3: Install MetalCloak Tire Carrier Arm

U. Install the 1/2” Rubber Grommet. Feed the Knob Hook through the Grommet and then through the Latch Arm. *Make sure the Latch is open before trying to close Tire Carrier Arm for the first time!*

V. Thread the Rubber Bumpers into the pre-tapped holes on the Arm.

W. Close the Tire Carrier Arm and test the fit; adjust the Striker as needed.

X. With the Tire Carrier closed, first tighten the frame hardware [L1] and then fully tighten the bottom Button Cap Screw [L2]. Tighten ALL hardware, adjusting as necessary.

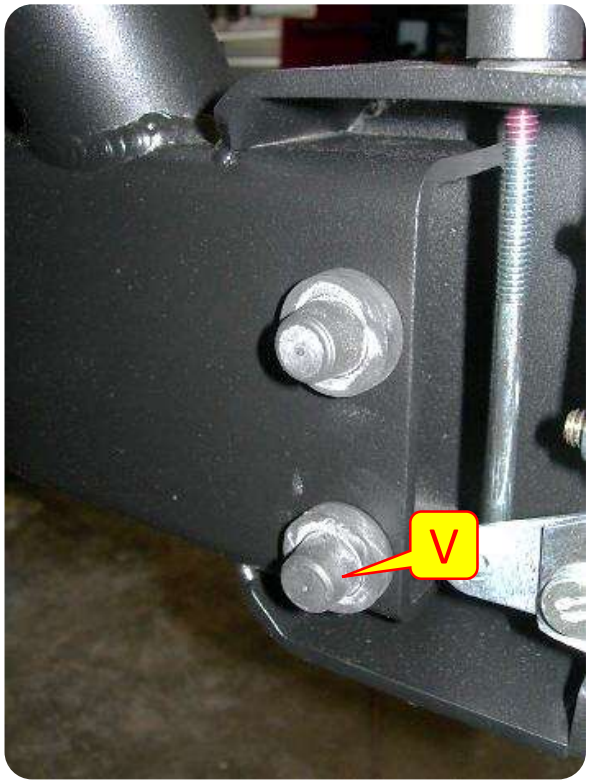

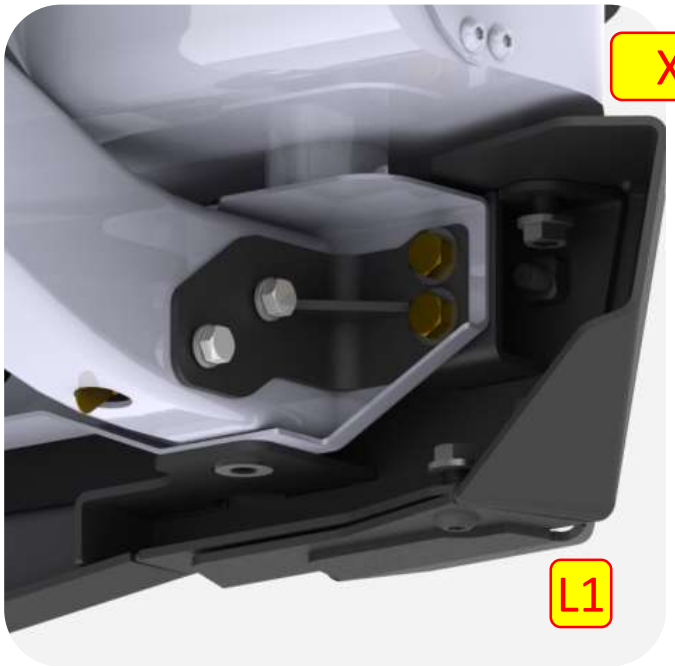

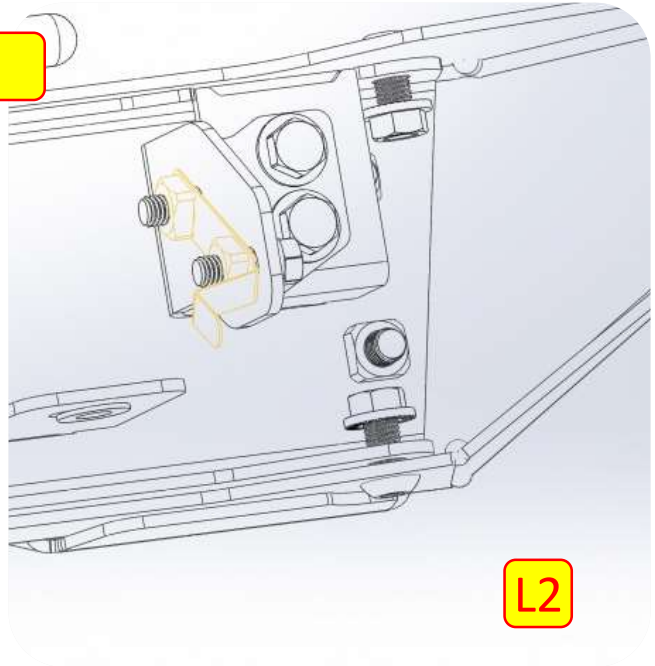

Step 4: Press in Wheel Stud

Y. Press the Wheel Studs (yellow) into the Horizontal Adjustment Bracket (orange) prior to installation. The images provided below show which holes are intended for the most common bolt patterns.

NOTE: *the "step" is intended to support the weight of your spare tire.*

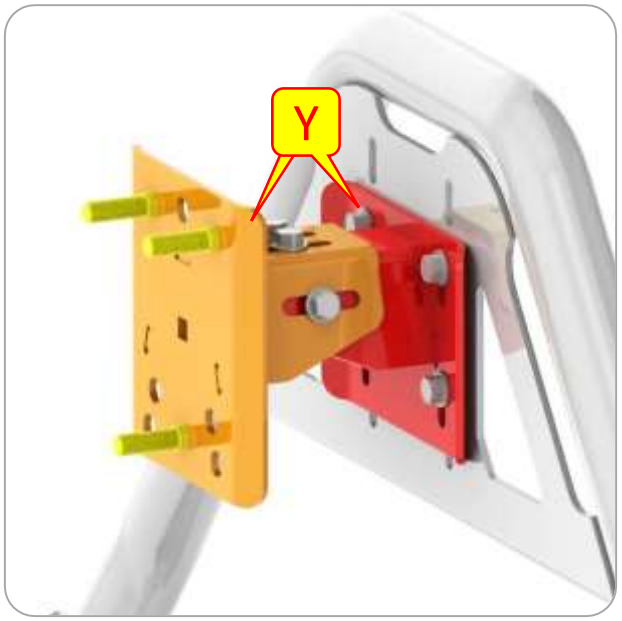

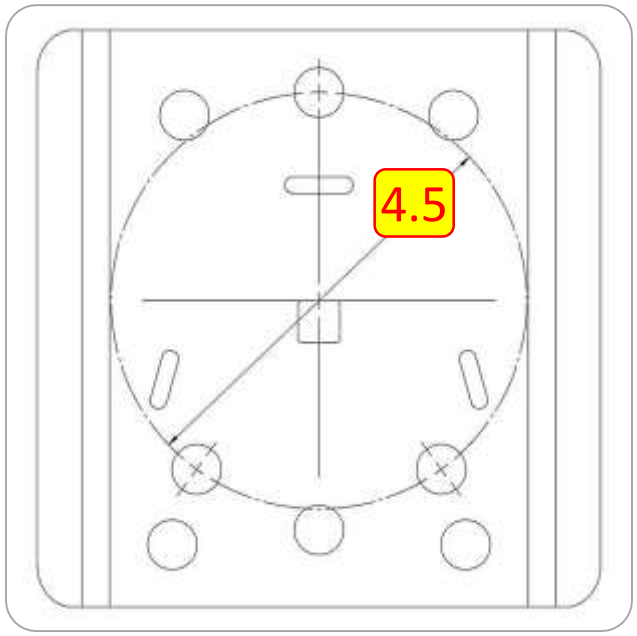

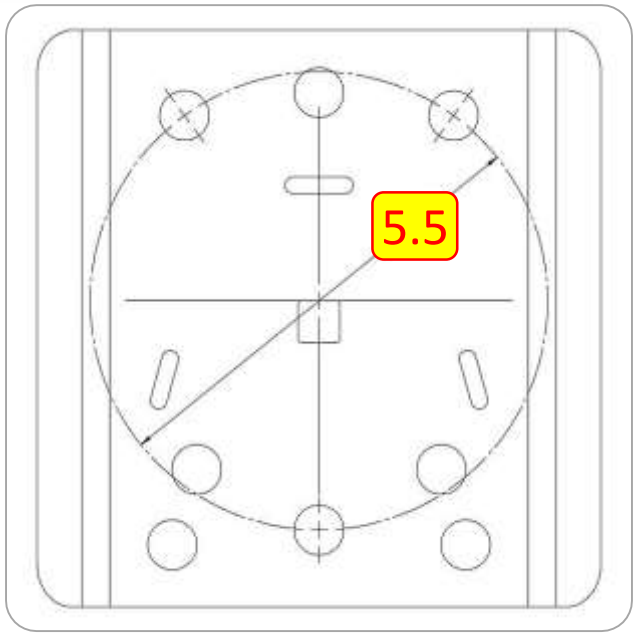

Step 4: Press in Wheel Stud

Z. To press the wheel stud into place. Place the wheel stud into the Adjustment bracket in the chosen wheel base location.

AA. Place a long socket on the other end of the adjustment bracket. Make sure the socket has enough room for the wheel stud to be pressed in fully.

BB. Place the wheel stud and socket inside a vice and tighten the vice until the wheel stud is completely pressed in. repeat process for remaining wheel studs.
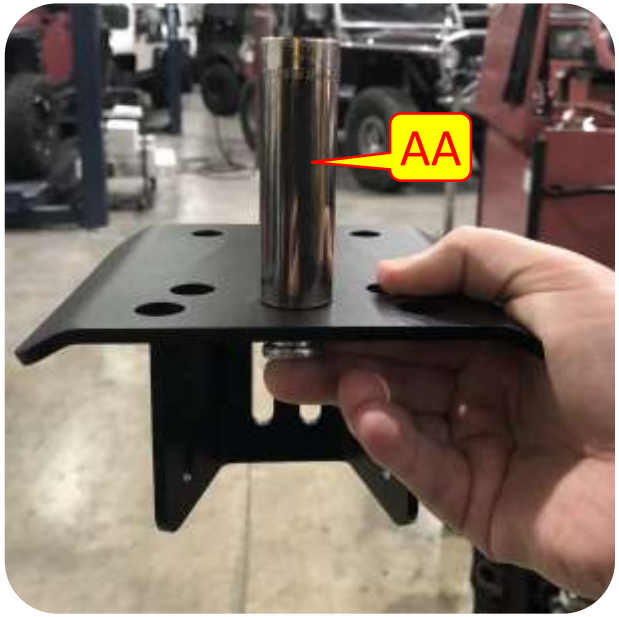
CC. Loosely bolt all components together with 3/8" Hex Cap Flange Bolts and Hex Flange Nuts. Place your tire on the Wheel Studs and adjust Bracket locations as necessary. Tighten all hardware. ***NOTE:*** *the "step" is intended to support the weight of your spare tire.*