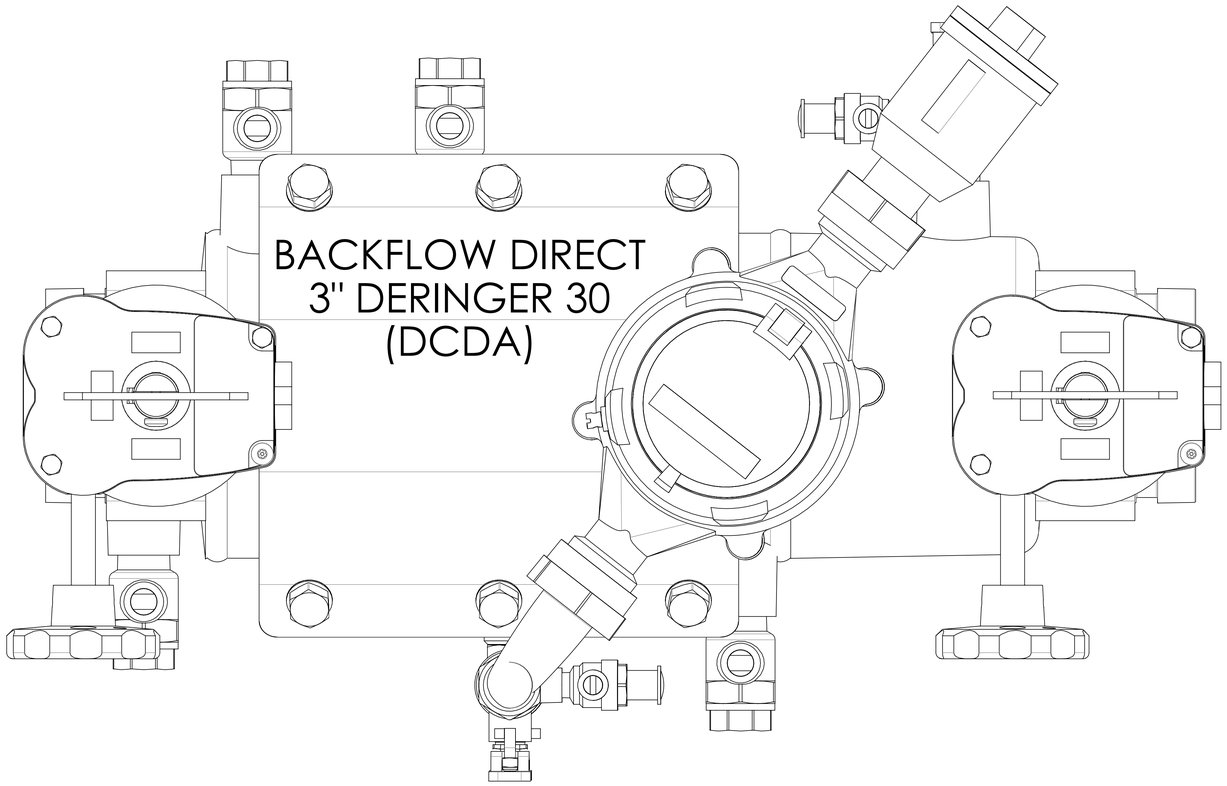
BACKFLOW DIRECT
3" DERINGER 30
(DCDA)

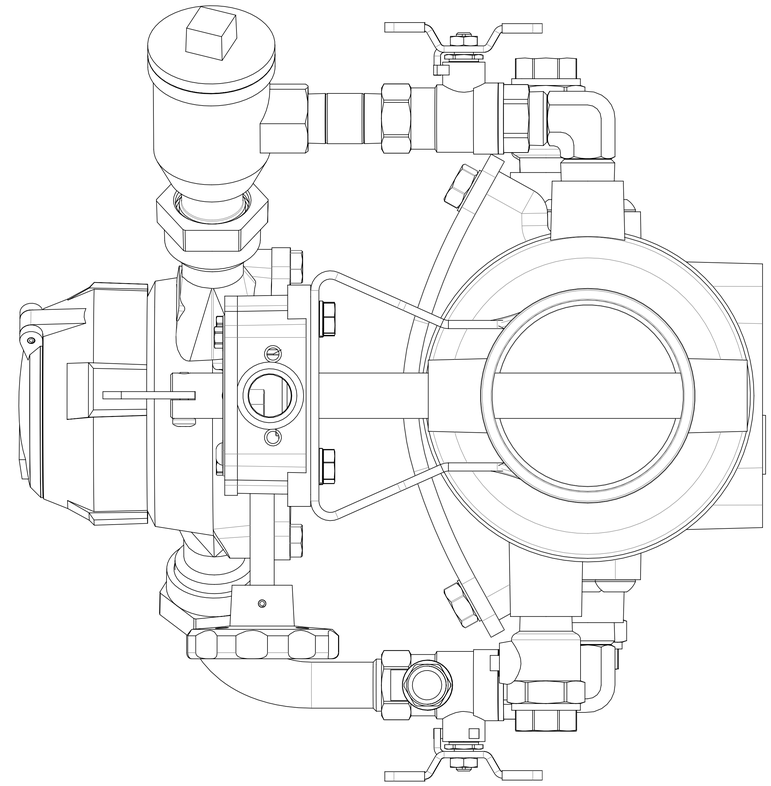

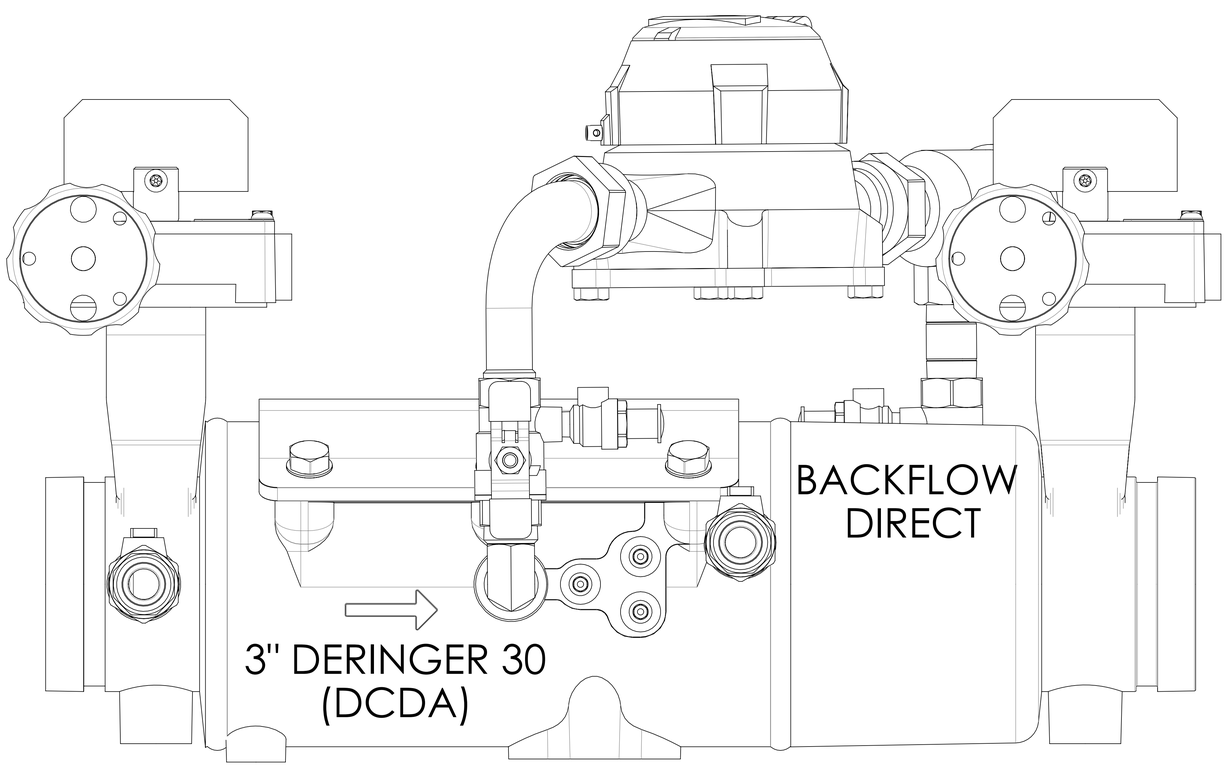
BACKFLOW
DIRECT
3" DERINGER 30
(DCDA)

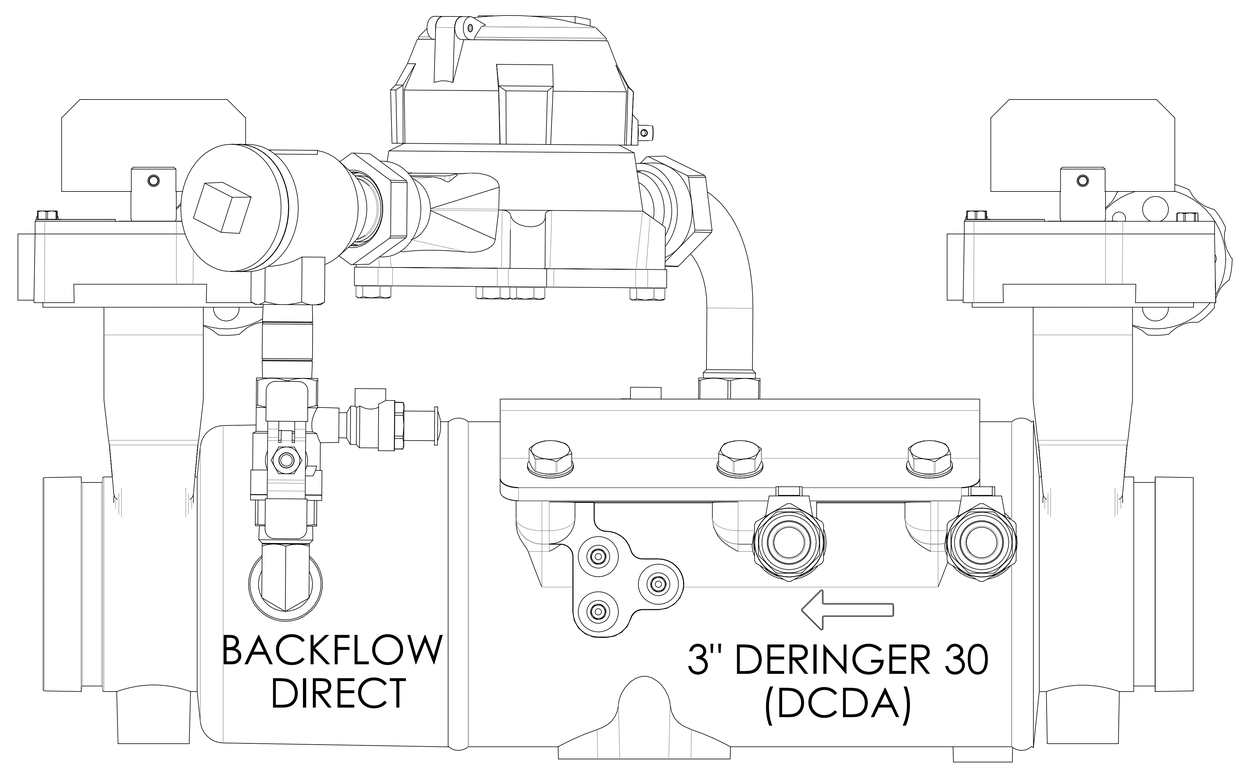
BACKFLOW
DIRECT
3" DERINGER 30
(DCDA)