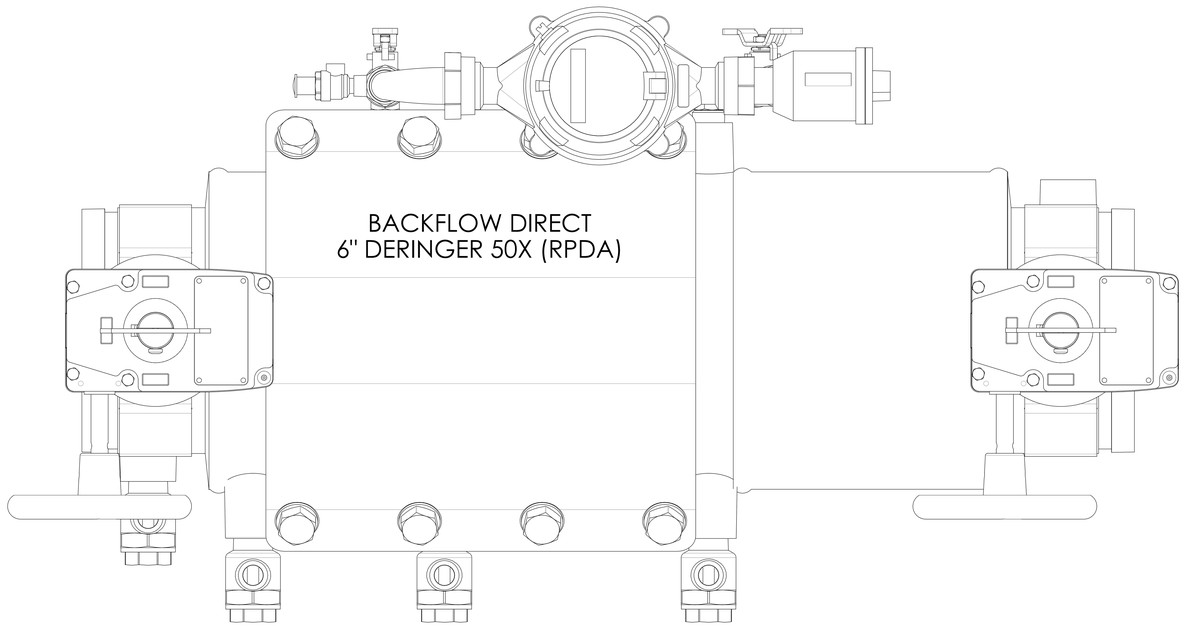
BACKFLOW DIRECT
6" DERINGER 50X (RPDA)

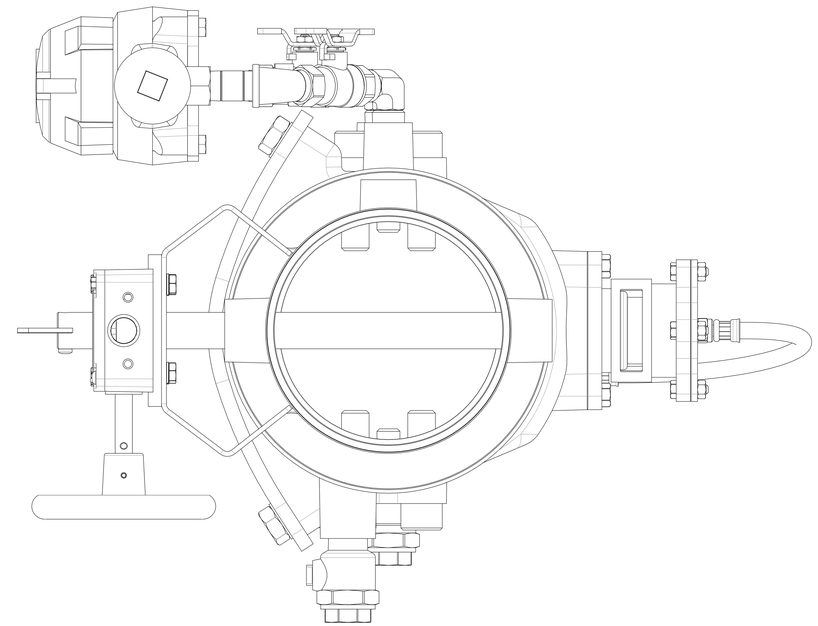

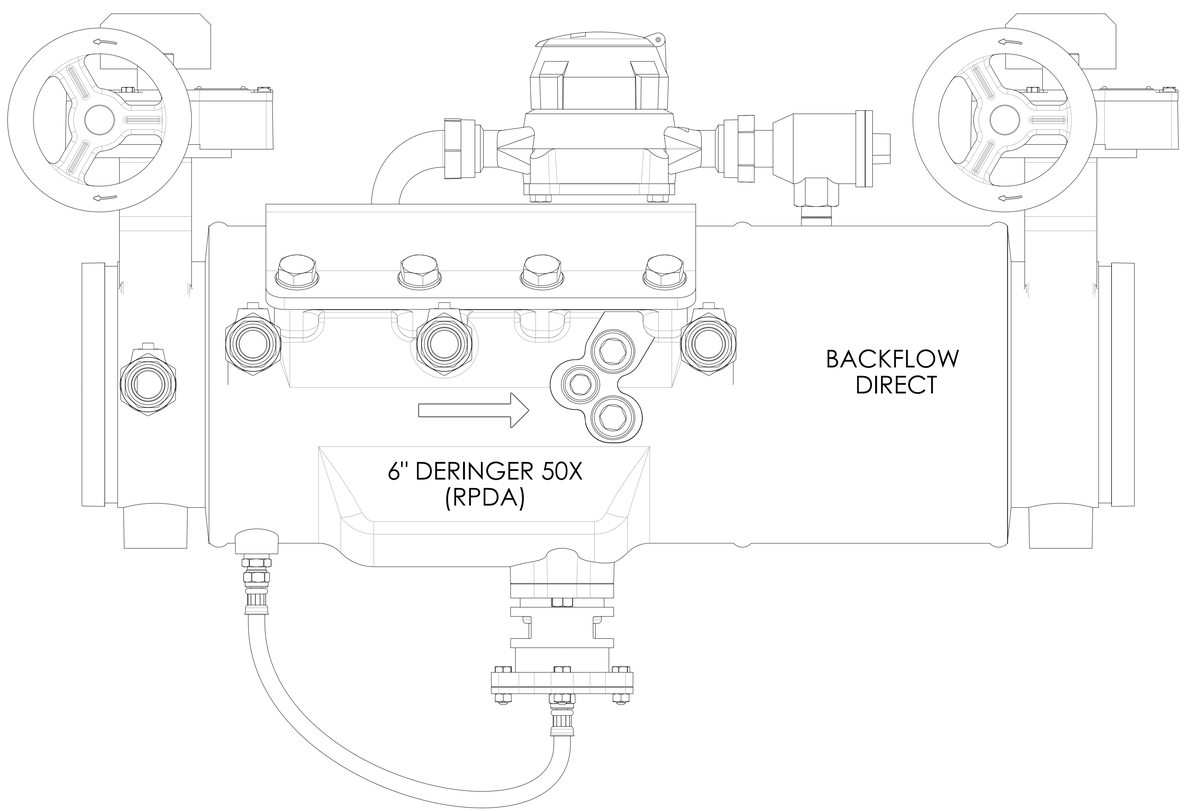
BACKFLOW
DIRECT
6" DERINGER 50X
(RPDA)

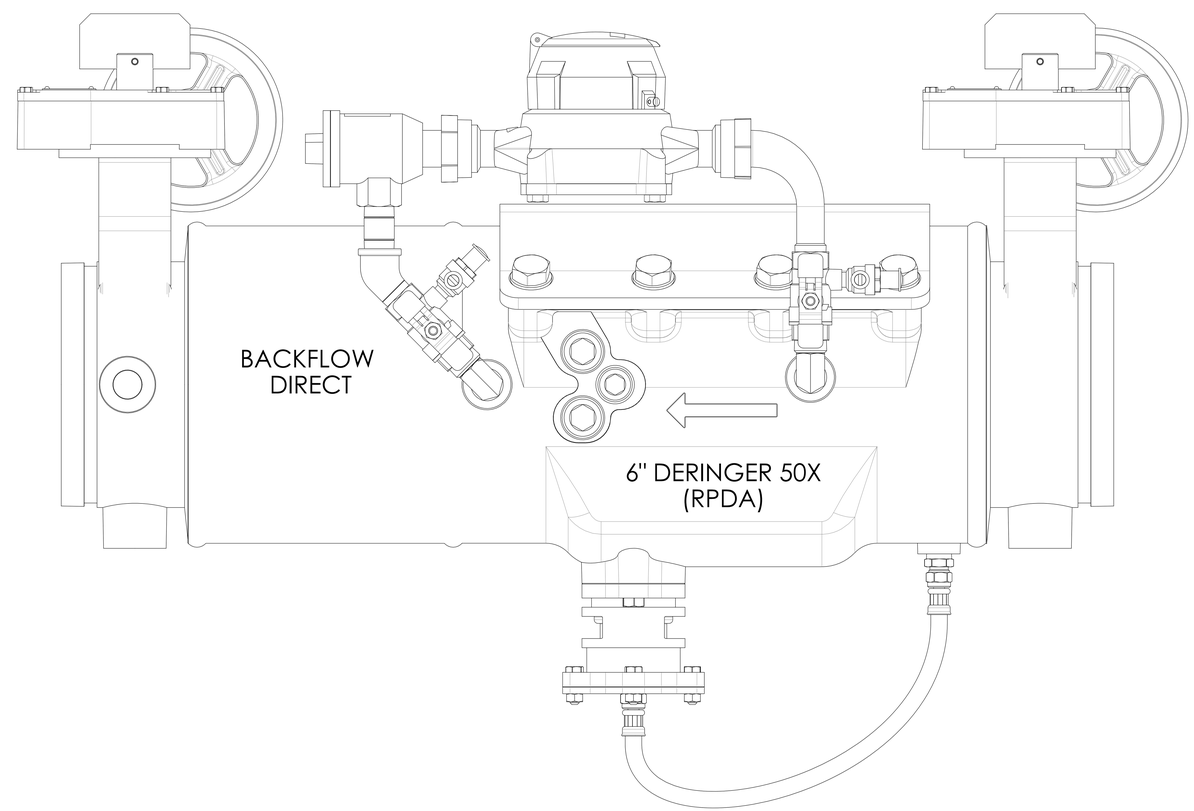
BACKFLOW
DIRECT
6" DERINGER 50X
(RPDA)