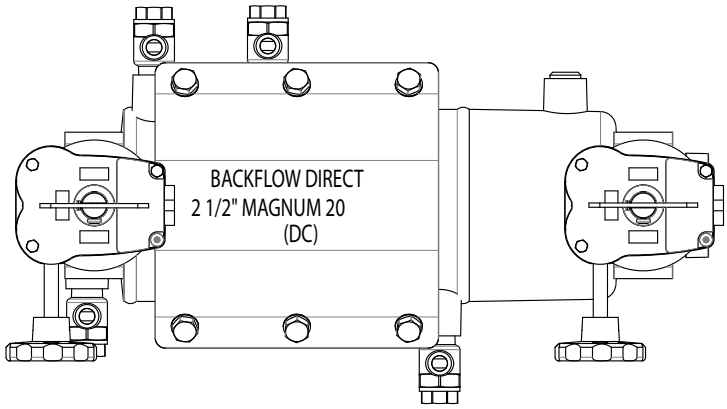
BACKFLOW DIRECT
2 1/2" MAGNUM 20
(DC)

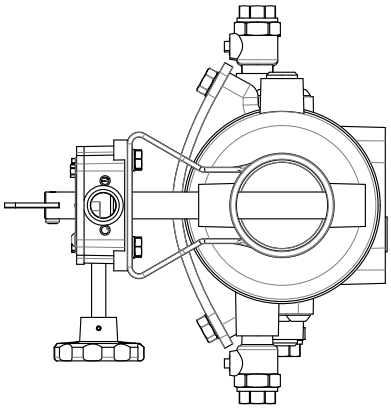

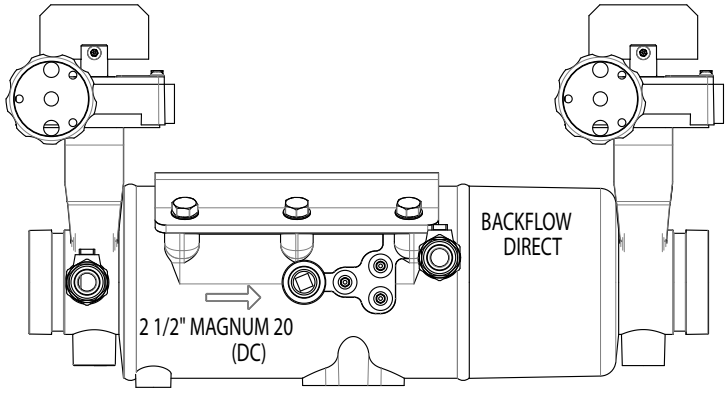
BACKFLOW
DIRECT
2 1/2" MAGNUM 20
(DC)

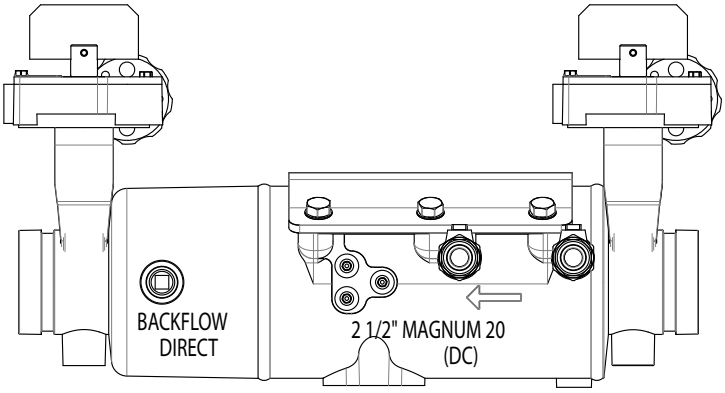
BACKFLOW
DIRECT
2 1/2" MAGNUM 20
(DC)