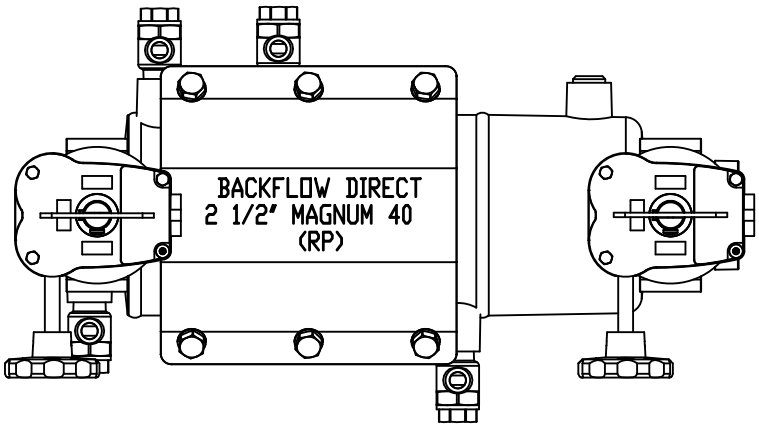
BACKFLOW DIRECT
2 1/2" MAGNUM 40
(RP)

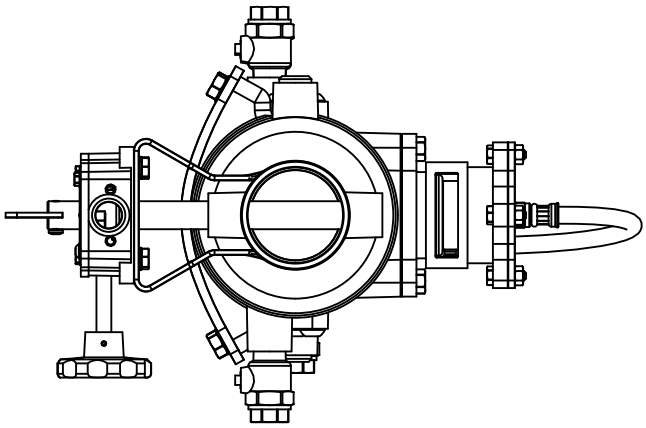

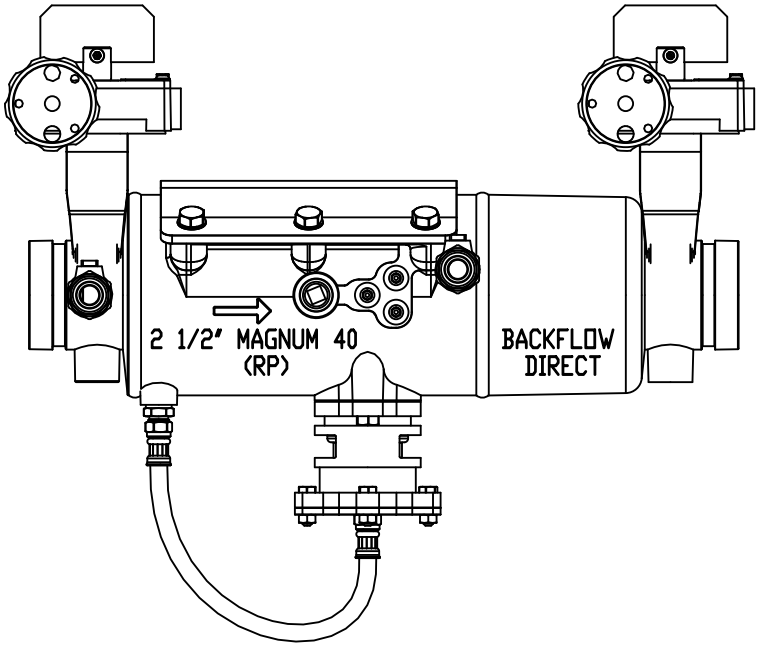
2 1/2" MAGNUM 40
(RP)
BACKFLOW
DIRECT

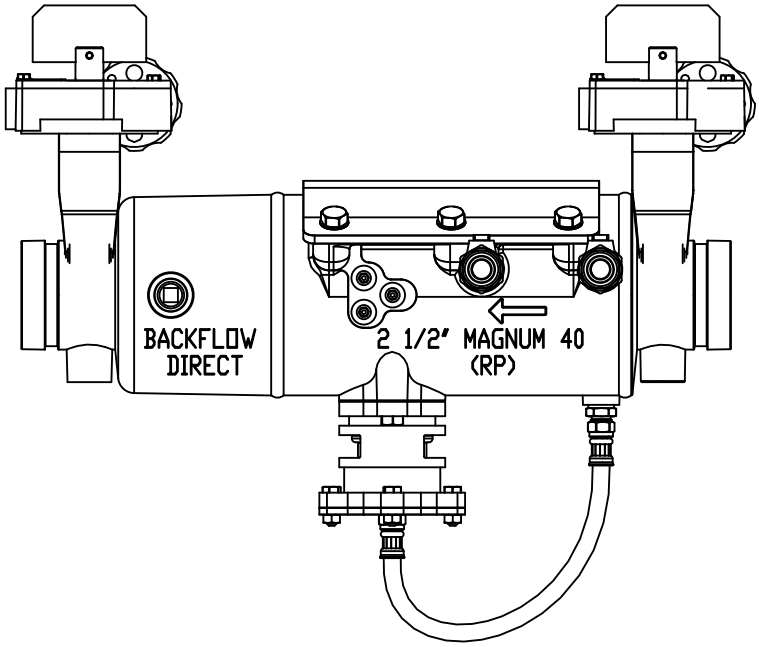
BACKFLOW
DIRECT
2 1/2" MAGNUM 40
(RP)