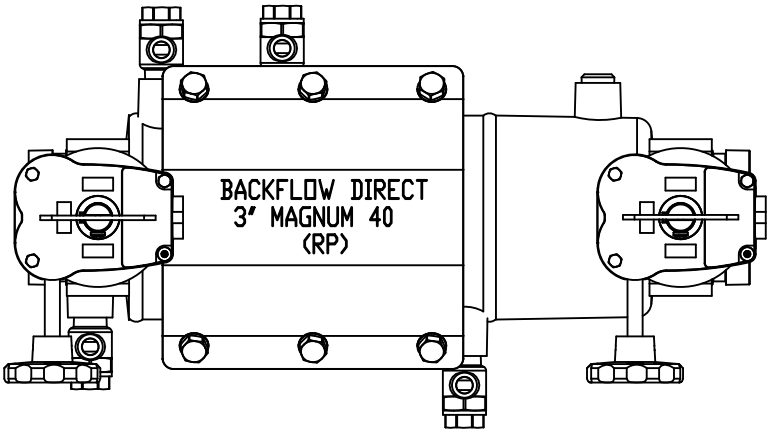
BACKFLOW DIRECT
3" MAGNUM 40
(RP)

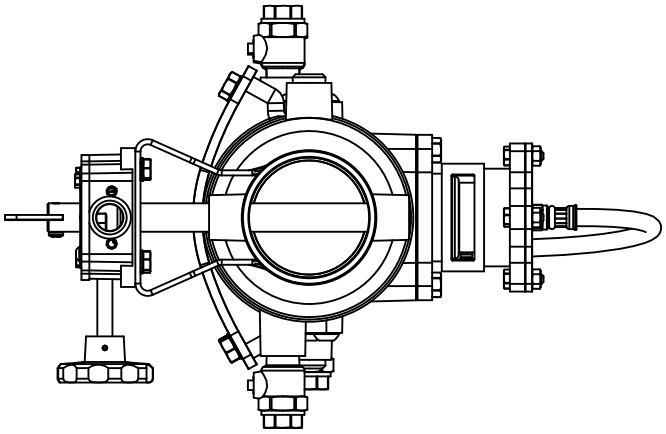

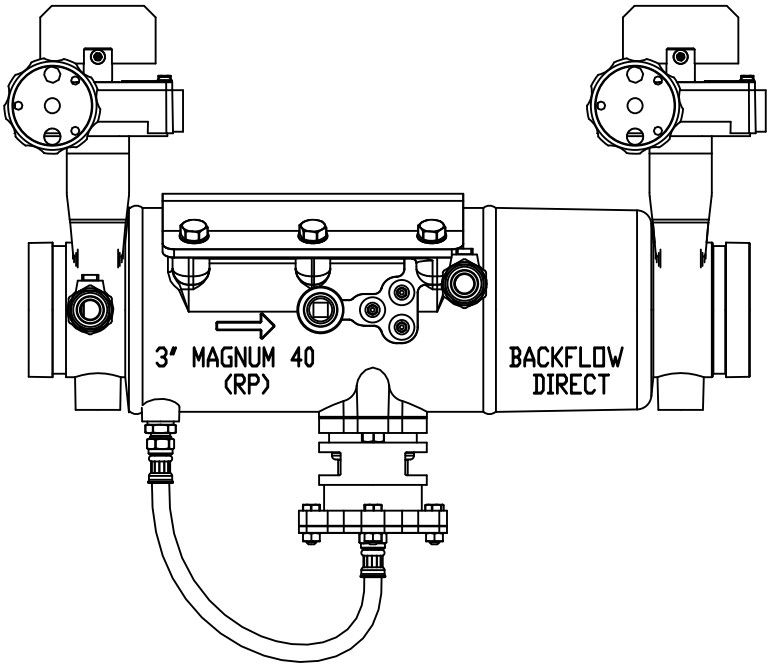
3" MAGNUM 40
(RP)
BACKFLOW
DIRECT

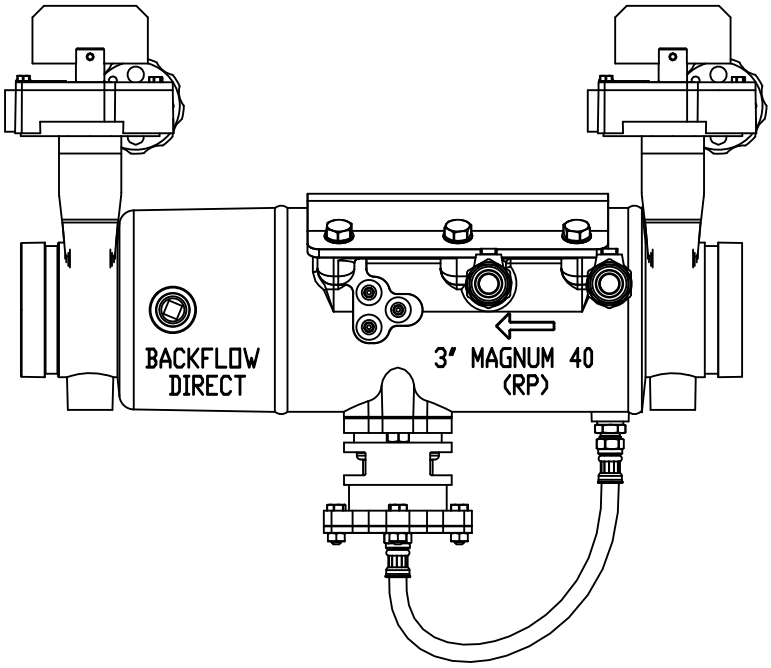
BACKFLOW
DIRECT
3" MAGNUM 40
(RP)