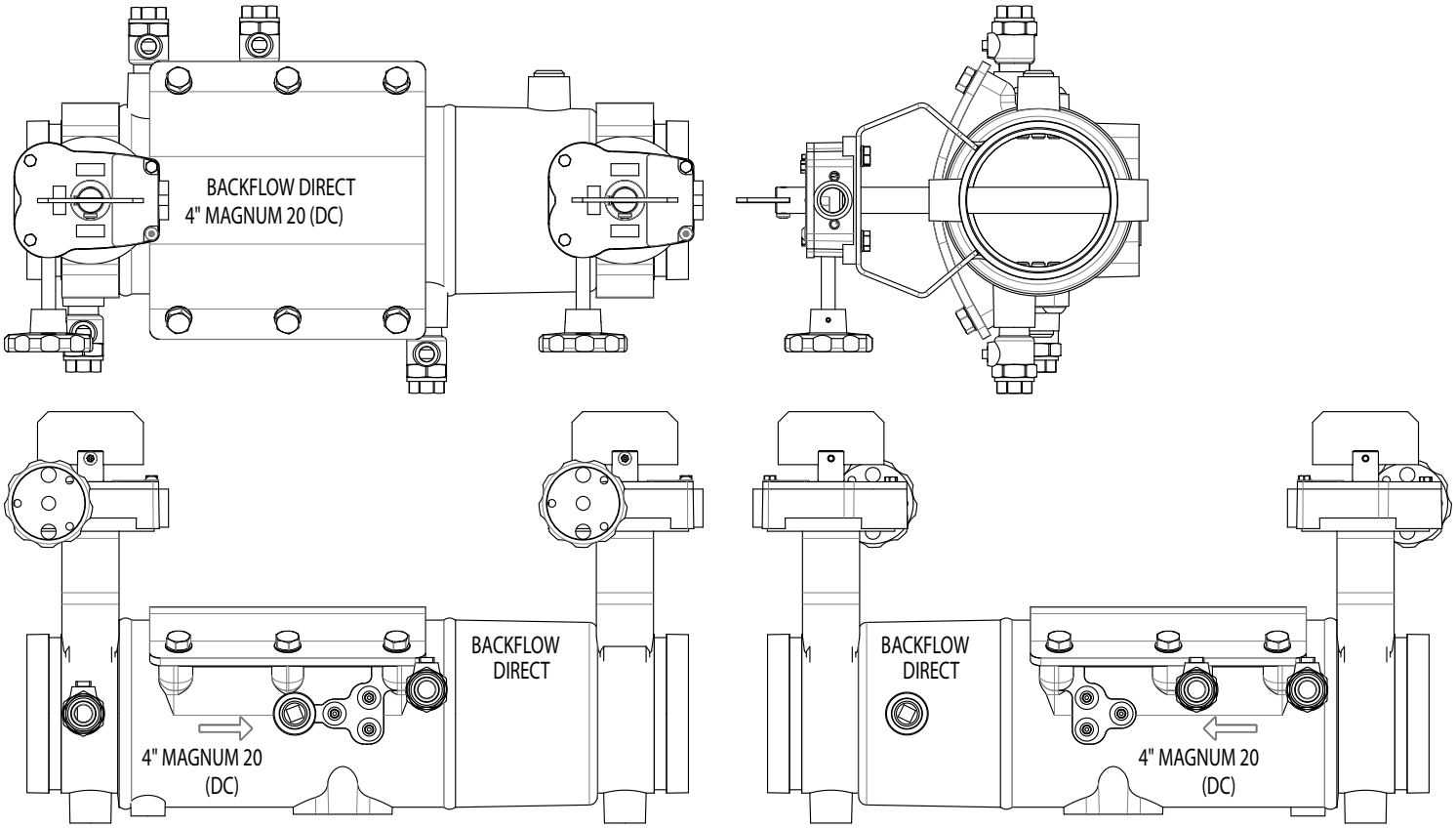
BACKFLOW DIRECT
4" MAGNUM 20 (DC)
BACKFLOW
DIRECT
4" MAGNUM 20
(DC)
BACKFLOW
DIRECT
4" MAGNUM 20
(DC)