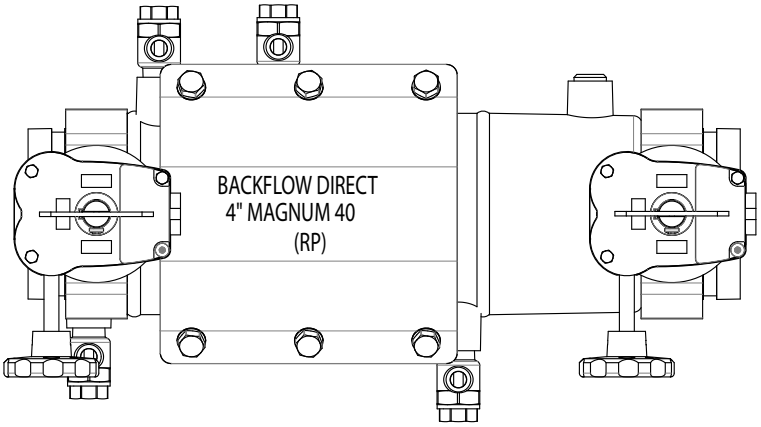
BACKFLOW DIRECT
4" MAGNUM 40
(RP)

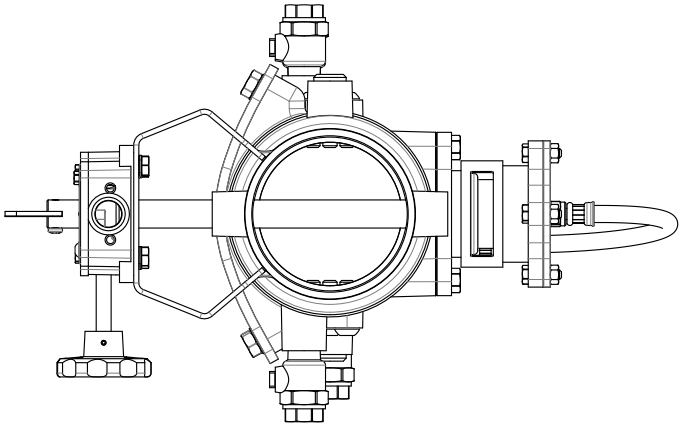

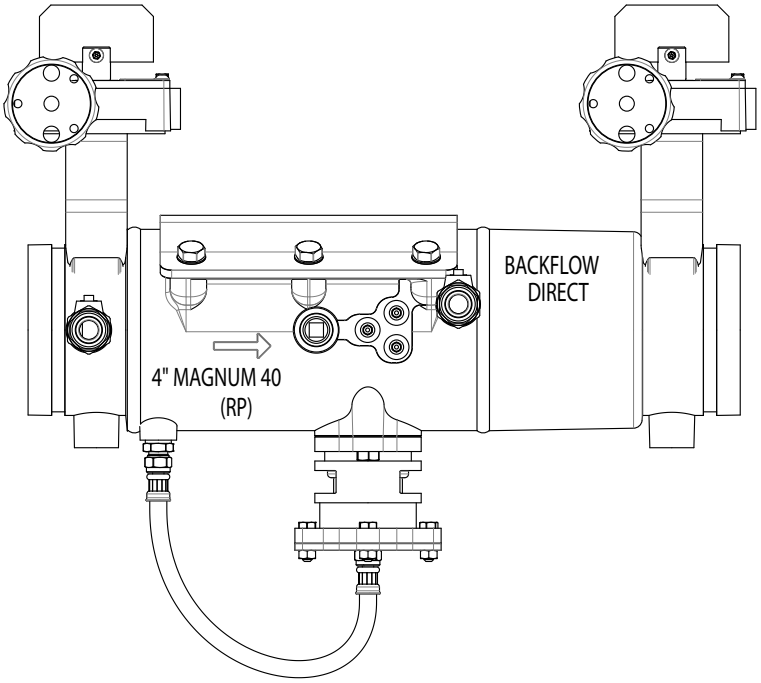
BACKFLOW
DIRECT
4" MAGNUM 40
(RP)

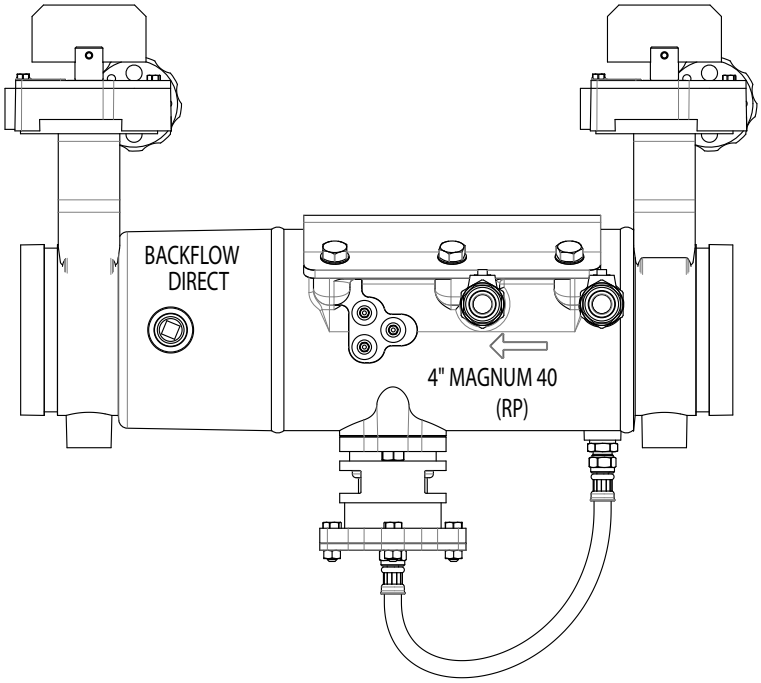
BACKFLOW
DIRECT
4" MAGNUM 40
(RP)