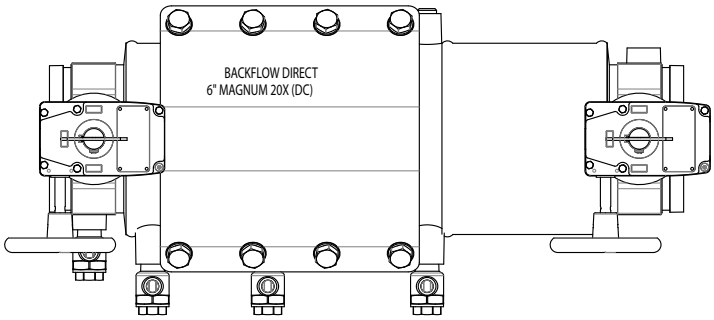
BACKFLOW DIRECT
6" MAGNUM 20X (DC)

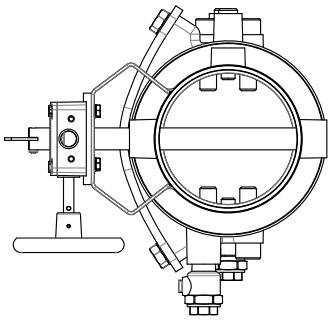

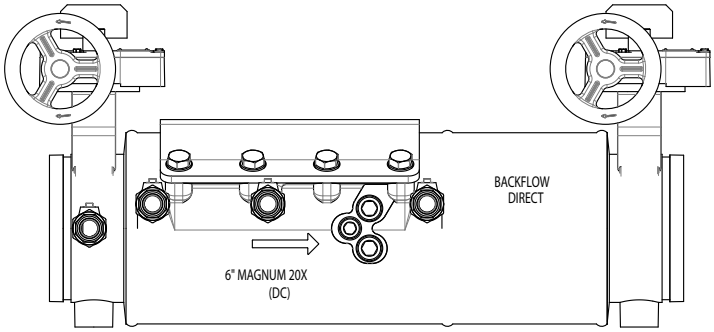
BACKFLOW
DIRECT
6" MAGNUM 20X
(DC)

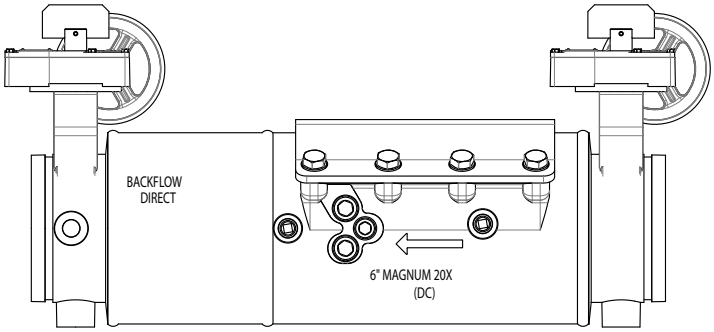
BACKFLOW
DIRECT
6" MAGNUM 20X
(DC)