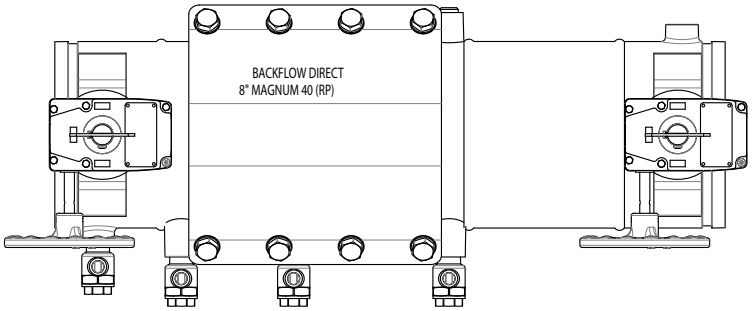
BACKFLOW DIRECT
8" MAGNUM 40 (RP)

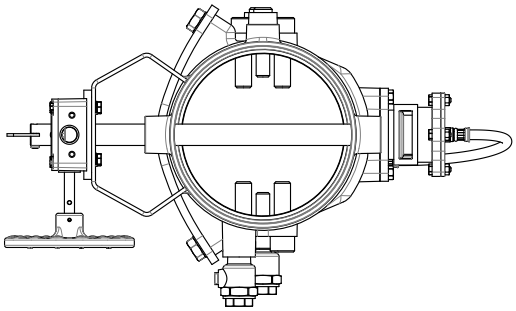

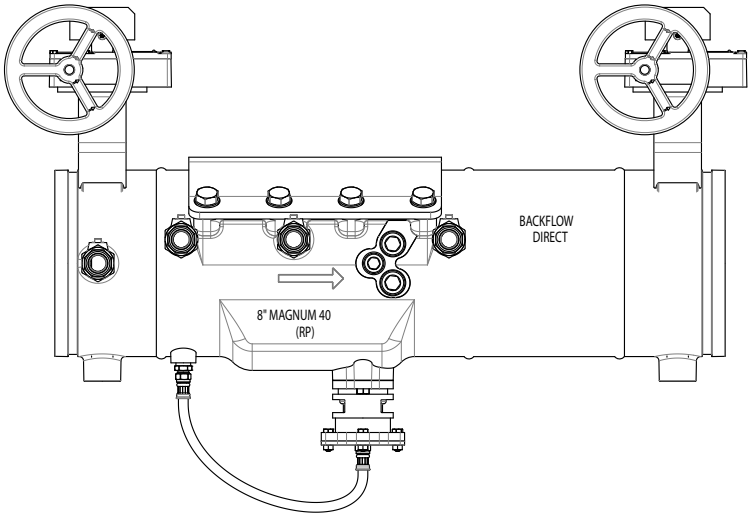
BACKFLOW
DIRECT
8" MAGNUM 40
(RP)

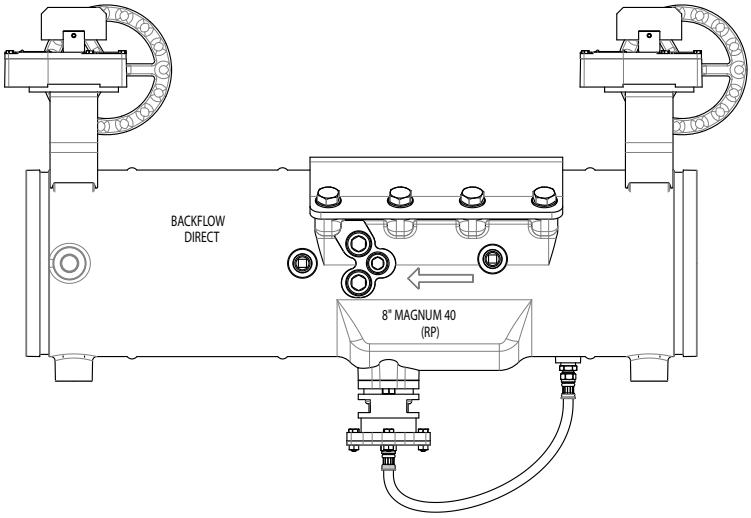
BACKFLOW
DIRECT
8" MAGNUM 40
(RP)