Valve Performance

Formula for K_v $\Delta P = Q^2 / K_v^2$

K_v = Flow Factor

Q = Flow (m^3 / hr)

ΔP = Pressure (bar)

Formula for C_v $\Delta P = Q^2 / C_v^2$

C_v = Flow Coefficient

Q = Flow (GPM)

ΔP = Pressure Drop (psi)

Nominal Valve Size		Actual Outside Diameter		Flow Coefficient (C_v)	Flow Factor (K_v)	Equivalent Feet Of Pipe *
in	mm	in	mm	English	Metric	ft
2½	65	2.9	73.0	250	216	4.6
3	80	3.5	88.9	400	346	5.6
4	100	4.5	114.3	700	606	7.5
6	150	6.6	168.3	1600	1384	11.9
8	200	8.6	219.1	3100	2682	13.3

** Specified for standard schedule 40 steel pipe.*

Wiring Instructions

1. The supervisory switch assembly contains two single pole, double throw, pre-wired switches. A primary and an auxilary.

2. Switch ratings:
   10 amps @ 125 or 250 VAC/60 Hz
   0.5 amps @ 125 VDC
   0.25 amps @ 250 VDC

3. Primary and Auxilary, supervise the valve in the "OPEN" position.

4. Primary has two #18 insulated wires per terminal, permitting complete supervision of leads. Auxilary has one #18 insulated wire per terminal. This double circuit allows for the operation of two separate electrical devices (audible alarms, indicating lights, etc.) in close proximity to the valve installation.

5. A #14 insulated ground lead (green) is provided

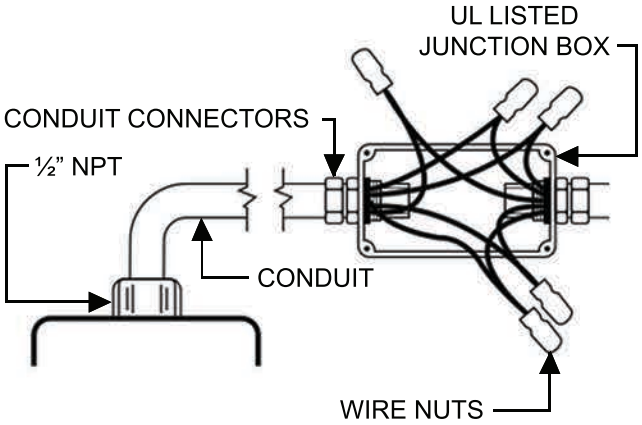

Primary (S1) For connection to a supervisory circuit of a UL Listed alarm control panel.

Auxilary (S2) For connection to auxiliary devices per the authority having jurisdiction.

S1	Normally Closed: (2) Blue Normally Open: (2) Brown Common: (2) Yellow

S2	Normally Closed: Blue with Orange Stripe Normally Open: Brown with Orange Stripe Common: Yellow with Orange Stripe

Note: The below diagram shows a connection between terminals (S1: Yellow / S2: Yellow with Orange Stripe) and the normally Open Terminals (S1: Brown / S2: Brown with Orange Stripe). In this example the signal switch will remain open (No current through switch) as long as the valve remains Fully Opened. Once the Valve begins to close the signal switch will change from open to close (current will flow through switch). Only S1 (two leads per terminal) may be connected to the fire alarm control panel. The connection of the alarm switch wiring shall be in accordance with NFPA 72 and the auxiliary switch per NAPA 70 (NEC). Remember to cap off any unused wire and that your conduit connections are water tight.

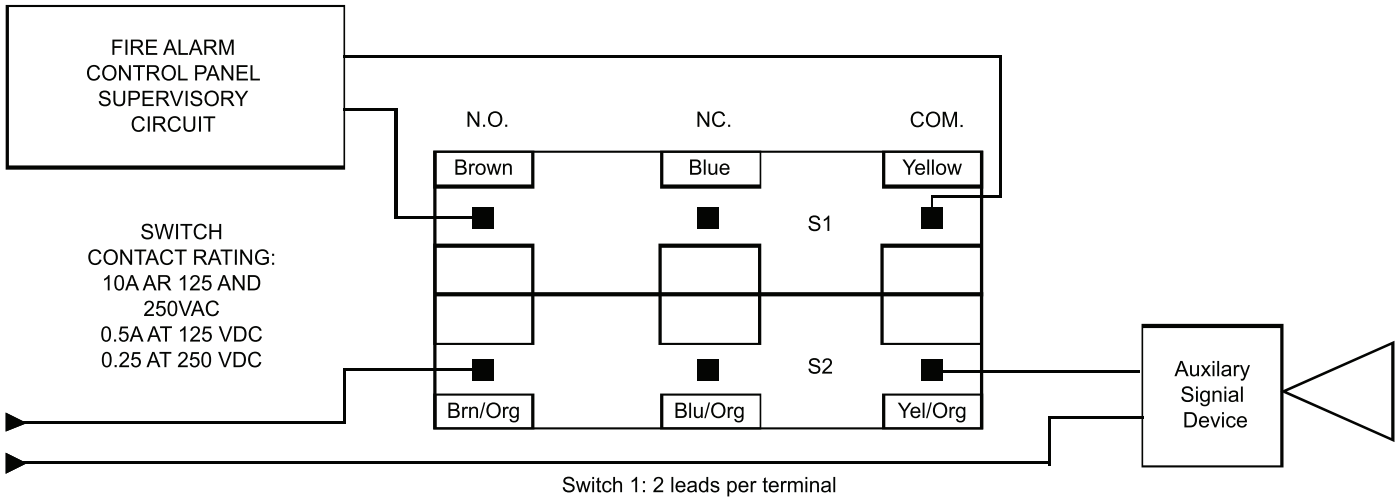

Switch 1: 2 leads per terminal
Switch 2: 1 lead per terminal